Enbridge Line 5

Straits of Mackinac, MI

Biota Investigation Work Plan

Enbridge Energy, Limited Partnership

Submitted: September 27, 2016

Table of Contents

1.0 Introduction 1

2.0 Consent Decree Requirements 2

3.0 Methods 3

3.1 Literature Searches 3

3.2 Study Areas, Zones, and Sampling Locations 3

3.3 Underwater Surveys, Measurements, Sampling, and Readings 5

3.3.1 Visual Biota Surveys 6

3.3.2 Biota Measurements 7

3.3.3 Biota Sampling 7

3.3.3.1 Coated Pipe 9

3.3.3.2 Holidays 10

3.3.3.3 Additional Sampling 11

3.3.3.4 Sample Handling and Preparation 11

3.3.4 Pipe Integrity Readings 12

3.3.4.1 Cathodic Protection Evaluation 12

3.4 Engineering Stress Analysis 12

4.0 Sample and Lab Analysis 14

4.1 Biota Counts/Densities/Weight 15

4.2 Presence/Absence Bacteria Testing 15

4.3 Coating Integrity Testing 16

5.0 Quality Assurance/Quality Control 17

6.0 Schedule and Deliverables 19

7.0 Workforce 21

8.0 Literature Cited 22

FIGURES

Figure 1 – Qualitative assessment of the biota across the east pipeline

Figure 2 – Qualitative assessment of the biota across the west pipeline

Figure 3 – General profile view of east and west pipelines and associated zones

Figure 4 – Profile view of sampling zones and sites for the east pipeline

Figure 5 – Profile view of sampling zones and sites for the west pipeline

Figure 6 – Biotic sampler

Figure 7 – Coated pipe area sampling layout

Figure 8 – Holiday area sampling layout

TABLES

Table 1: Biota sample sites: East and West pipelines

Table 2: Holiday area sample sites: East and West pipelines

APPENDICES

Appendix A. Bibliography

LIST OF ACRONYMS

ANOVA	Analysis of variance
APB	Acid producing bacteria
CP	Cathodic Protection
Enbridge	Enbridge Energy, Limited Partnership
EPA	Environmental Protection Agency
mV	Millivolt
SRB	Sulfate-reducing bacteria
USACE	United States Army Corps of Engineers
VIV	Vortex induced vibration

1.0 Introduction

Enbridge Energy, Limited Partnership (Enbridge) has been ordered by federal consent decree (Case 1:16-cv-00914, ECF No. 3 filed 07/20/16) to conduct measures to prevent spills in the Straits of Mackinac (Subsection VII.E of the consent decree). The consent decree contains requirements specifically focused on the two 20-inch diameter pipelines ("Dual Pipelines") that span the Straits of Mackinac ("Straits") as part of Enbridge's' Lakehead System Line 5 pipeline ("Line 5").

Per the consent decree, Enbridge must conduct an investigation ("biota investigation") to assess whether any of the biota found on the pipeline impacts the integrity of the Dual Pipelines. Prior to undertaking that effort, Enbridge must submit to the United States Environmental Protection Agency ("EPA") for approval, a proposed plan for the biota investigation described in Subparagraph 69.a. This document details Enbridge's plan for a biota investigation that will satisfy requirements of the consent decree listed in Subparagraph 69.a. Enbridge anticipates the information obtained from this investigation will complement the information gathered during integrity monitoring activities already undertaken by the company.

2.0 Consent Decree Requirements

The consent decree includes three requirements ("assessments") that must be part of Enbridge's biota investigation. Those assessments are listed below, and associated efforts presented herein, are designed to provide information to address the requirements in the consent decree. The assessments were not numbered in the consent decree but have been numbered in this document for consistency in referencing the assessments.

- Assessment 1: "…..assess whether the accumulation of mussels and other biota have impacted the integrity of the pipelines' coating or the underlying metal, including areas where there are openings or "holidays" in the pipeline coating."

- Assessment 2: "…..evaluate whether the mussels and other biota are creating a corrosive environment by, among other things, fostering the growth of anaerobic sulfate-reducing bacteria ("SRB") that may cause metal loss."

- Assessment 3: "…..evaluate whether mussels and other biota are introducing features that may threaten the integrity of either of the Dual Pipelines due to the weight of such biomass or the pressure caused by current or ice movement around such biomass in areas where the pipelines are suspended above the floor of the Straits."

3.0 Methods

Prior to development and submittal of this Biota Investigation Work Plan ("Plan"), Enbridge conducted literature searches and reviews of key topics and issues to aid in identifying, developing, and proposing use of appropriate methodologies, assessments, and analyses that could best address the requirements of the consent decree. Additional scoping efforts included assessing video photography of the Dual Pipelines from 2014 and 2016 and overlaying pertinent pipeline and resource data. Those preliminary efforts have facilitated development of this Plan. Opportunistic testing of techniques and methodologies will enable subsequent sampling and monitoring efforts to be more refined to increase the effectivity and integrity of the data collected.

3.1 Literature Searches

Literature searches and reviews included, but were not limited to, limnological data of the Straits, physical and chemical features of aquatic biota previously observed on the pipelines, field data collection methodologies, cathodic protection, and SRB. Appendix A provides a bibliography of the literature reviewed.

3.2 Study Areas, Zones, and Sampling Locations

Proposed locations for surveying and obtaining aquatic biota samples were determined based upon a wide range of information. Primary factors included video photography from 2014 and 2016 coupled with a literature review of limnological information on the Straits. Underwater video-photography provided useful information in identifying types of aquatic biota present and changes in composition and density of that aquatic biota at various depths and locations on the pipes. The proposed sampling locations also took into consideration various water depths, aquatic biota composition, areas of suspended and non-suspended pipe, and areas of suspected water currents.

Figures 1 and 2 summarize qualitative observations made of the aquatic biota on the east and west pipelines, respectively, using 2014 and 2016 video photography. A review of 2016 video-photography for both pipelines indicated that the composition and density of biota along both pipelines were similar to one another, and that findings presented were representative of both pipelines (Enbridge, 2016). Based on those similarities, an equal number of samples will be

collected on each pipeline with a total of 14 sites designated for sampling. Using the video-photography information, four zones were established based upon physical and biological features associated with various water depths and apparent photic zones of the Straits across both the Dual Pipelines. Figure 3 shows the location of the four zones across the east and west pipelines.

Zone D represents the deepest portions of the Straits while Zones A, B, and C are comprised of both a north and south portion as they transition from Zone D towards land (Figure 3). The four zones for the east and west pipelines and a basic description relative to each are provided below:

- Zone A – Approximately 50- to 100-foot water depth; periphyton most abundant; mussels present
    - There is a Zone A at the northern and southern ends of each of the Dual Pipelines.
- Zone B – 100- to 150-foot water depth; periphyton moderate, mussels moderate.
    - There is a Zone B at the northern and southern ends of each of the Dual Pipelines.
- Zone C – 150- to 200-foot water depth; periphyton sparse, mussels most abundant
    - There is a Zone C at the northern and southern ends of each of the Dual Pipelines.
- Zone D – Over 200-foot water depth; mussels abundant
    - There is only one Zone D as it represents the deepest zone of each of the Dual Pipelines.

This Plan proposes to provide visual surveys and collection of biotic samples from locations representative of each zone of the Dual Pipelines, while also correlating those sampling locations with the limited numbers of areas of the pipeline where there is a loss of coating around the pipe (“holidays”). Pipeline sampling locations were selected near the mid-point of each zone or proximal to a holiday area. Figure 3 shows the approximate location of sampling sites across the east and west pipelines.

Biotic samples will be collected from each of the north and south components of Zones A, B, and C, and the deep water areas of Zone D (Table 1, Figures 4 and 5). One sampling site per

zone has been designated on the east pipeline, with three of the sites coinciding with holiday areas. One sampling site per zone has been designated on the west pipeline, with four of the sites coinciding with holiday areas. Table 2 provides the location of the representative holidays sampled within each zone of each pipeline.

Data generated from each pipeline will be used to verify that biota communities are similar across both pipelines. Biota sampling will follow the protocols and methodologies provided below and the schedule provided below in Section 6.0 Schedule and Deliverables.

3.3 Underwater Surveys, Measurements, Sampling, and Readings

In evaluating appropriate sampling methods to use, literature searches and reviews provided relatively few articles or studies where biotic samples were being collected from deep freshwater structures for analysis. Many of the references were from marine environments and were associated with saltwater corrosion issues and/or aquatic biota that are not present in the freshwater of the Straits (Castaneda and Benetton, 2008; Duperron, 2010; Moura et al., 2013). The overall paucity of references dealing with biota collection in deep freshwater environments necessitated adapting sampling methodologies and principles utilized in marine environments and modifying them for use in the Straits (Gale and Thompson, 1975; Hicks and Oster, 2012; Kikuchi et al., 2006; Purcell, 1996; Purcell and Bellwood, 2001; Water Research Foundation, 2015).

Based upon discussions with marine contractors who have conducted maintenance related activities for Line 5, a professional diver will be required to perform the proposed visual survey, data collection, and sampling tasks given that pipeline sampling locations range from approximately 65 to over 225 feet below the water surface of the Straits. Surveying, data collection, and sampling methods were selected to address the requirements of the consent decree while also being manageable by a diver operating at those extreme depths using gloves and necessary safety gear. The conditions also require that the size and number of sampling containers be kept at a minimum while still maintaining the integrity of the samples and not impacting laboratory requirements (for sample mass) and subsequent statistical analyses.

Each diver will be equipped with a video camera so that visual surveys and data collection activities can be observed and directed (as necessary) by surface staff to ensure data is being collected accurately and scientifically. Field data and biota will be obtained as effectively and efficiently as possible, while also adhering to safety and time constraints imposed from working in various water depths and underwater currents associated with the Straits. Dive times will be limited to approximately 30 minutes or less when operating at depths of 120 feet or greater.

Enbridge (2016) identified that the apparent density of mussels and other biota on the Dual Pipelines varied based upon water depth and past maintenance and monitoring activities. In some areas, past maintenance and monitoring activities resulted in the removal of mussels (if a sampling site occurs in one of those affected areas, the diver is to travel a maximum of 100 linear feet either north or south along the pipeline to reach an un-impacted area from which the samples can be collected). If all areas in that 100-linear-foot reach have been affected by past monitoring activities the samples shall be taken within the affected area (as it represents existing and representative conditions of that site). That applies to all survey and sampling activities outlined below. The extent to which mussels have or have not recolonized the pipe at these locations will be recorded.

3.3.1 Visual Biota Surveys

At each sampling site, video photography will be used to provide a visual record of the biota associated with various sections of the Dual Pipelines, the general appearance/condition of the Dual Pipelines, and to document the field sampling process. Prior to collecting samples, a slow pan view of the sampling site will be taken.

The slow pan view will enable qualitative characterization of the relative level of mussel colonization on the pipe (i.e., heavy, moderate, sparse, or none). The slow pan or other video photography footage obtained throughout the sampling dive may also provide data on the presence of fish species or macroinvertebrates that may be utilizing the pipelines for habitat (e.g., feeding and cover sites). Where positive identifications can be made by the diver or biologist(s) reviewing the video photography, the data will be recorded to the lowest possible taxa. Any apparent or overt impacts to the Dual Pipelines will be documented. Those areas will be closely inspected by the diver(s) allowing for additional video footage to be collected of those areas for further review.

3.3.2 Biota Measurements

To avoid any diver bias where measurements are to be taken, the diver upon arrival at a sampling site (locations provided in Table 3) will receive a random generated number (ranging from 1-100cm) from a person on board the boat. The diver will then proceed into the current (or to the north) that given distance and take measurements.

At this location, the thickness of biota on the pipelines will be determined. The circumference of the pipeline will be measured at three locations with a flexible tape measure. Once that measurement has been recorded, a “clean pipe” circumference measurement should be taken in the same location as the previous measurement. To do that, the diver should gently, but comprehensively, remove all attached material (mussels, periphyton, etc.) from the pipeline and re-measure the circumference. A combination of a narrow putty knife and nylon scrub brush may enable efficient and complete removal of the attached material. That process is repeated until three circumference measurements are obtained. That information will be useful in calculating point estimates of biota thickness at those specific locations on the pipeline.

If no mussels are present at a sampling site, the diver will still follow the protocol described above and obtain thickness measurements of the pipeline.

3.3.3 Biota Sampling

Biota samples will be taken at each sampling site, up-current of the biota measurements (Section 3.3.2 Biota Measurements). Taking these samples up-current of the biota measurements will minimize disturbances, turbidity, and any possible sample impacts or biases to the biotic sampling. Biota will be collected using sampling methods that will enable the collection of representative biota samples from the Dual Pipelines. Collection of biota from the Dual Pipelines will include all biota attached to or surrounding the pipelines, including mussels, macrophytes, periphyton, biofilm, etc. Biota will be collected in accordance with the protocol outlined below with the intent of collecting complete samples with little to no loss of biota. Biota will be evaluated and analyzed as presented in Section 4.0 Sample and Lab Analysis.

Prior to collection of biota samples, sampling containers (pre-labeled with sample site and pipeline position locations) will be held in front of the video camera so that the location of each set of samples is documented. The sampling containers for the biota samples need to enclose

a fixed surface area on the pipe to enable quantification (number of mussels per square centimeter) of the total surface area sampled at each site. As noted previously, the containers needed to be compact so divers can effectively transport numerous containers, handle, and deploy them at depth within their limited dive times. The containers also needed to be neutral or negatively buoyant (somewhat heavy) so if accidentally dropped they would not float away in the current. Therefore, a device enclosing a surface area of approximately 100 cm^2 will be developed and used, similar to that used by Purcell (1996).

Once the biota sampling site has been identified (up-current or north of the biota measurements), a set of paired samples will be taken from every designated location on or around the pipe. The uncapped end of the sampling container will be pushed firmly against the wall of the pipeline covering the biota to be collected. A metal blade (such as a putty knife) will be used to carefully cut off biota outside of the sampling container to ensure only biota that is within the interior of the container will be collected.

Biota samples will be collected using a container approximately four inches in diameter to provide for the collection of a sample area approximately equal to or greater than 100 cm^2 (Figure 6). At the present time, two different methods and containers for the collection of biota samples are being evaluated. Final selection of the method and container to be used will be made after field testing. Two containers and methods will be evaluated.

Method 1 includes the use of a PVC plastic container consisting of a 4-inch diameter circular PVC pipe, synthetic nylon screen (e.g., bolt cloth-Nitex), end caps, and water pressure release valve (i.e., vent) with a screw-in end cap (Figure 6). One end of the sampling container will be affixed with screen, end cap, and vent and the other end will be open for collection of the biota sample. The end caps for the PVC container and vent will be tethered to the sampling container to prevent loss of end caps during the collection process. A thin, flexible blade such as a putty knife will be slid in between the wall of the pipeline and the sampling container to dislodge biota from the pipeline up into the container. The dislodged material will be captured inside the sampling container. Mussels that are outside of the sampling container will not be included in the sample unless the majority of the length of the mussel is within the interior portions of the container. The metal blade will be used to push mussels into the interior of the sampling container or to pull them out from the container (where the majority of the mussel is outside of the container). At that point, the sampling container will be carefully removed from

the pipeline ensuring that the putty knife is held against the open end of the sampling container to minimize sample loss. The diver will place the end cap on the blade then slowly remove the blade so that the end cap can be pushed on to the open end of the container. The small vent will allow water to escape, yet retain material scraped off the pipeline due to the screen inside the upper part of the container. The container will be returned to the surface and the sample extracted and placed into storage bags as described in Section 3.3.3.4 Sampling Handling and Preparation.

Method 2 includes a slight modification to the container shown in Method 1. This method utilizes a PVC plastic flared square end section with an overhanging hood at the sample collection end of the sampler. The underside (opposite side of the hood) is sharpened to create a scraping tool to dislodge biota from the pipe (this allows the diver to scrape biota with one hand vs. two hands as required with Method 1). The biota sample dislodged from the scraping tool will then move up and into the hood, then into an attached collection bag. The sampling container is expected to create an internal vacuum to keep the biota sample moving up and into the collection bag.

The final sampling container and method used to collect biota samples, as part of implementing this Plan, is expected to undergo additional modifications and refinements to those currently presented. Containers described in Methods 1 and 2 will be field tested and any subsequent improvements to the containers and methods will be made to increase the divers' ability to handle and maintain the integrity of the samples being collected (i.e., minimize sample loss and obtain samples from a defined area).

3.3.3.1 Coated Pipe

At all sampling locations, except for holiday areas (which will be described in Section 3.3.3.2 Holidays), biota samples will be collected following the protocols described above in Section 3.3.3 Biota Sampling. Samples will be taken from four different positions on the pipelines (top, both sides, and the bottom). A set of two samples will be taken from each of the four positions for a total of eight sampling containers per sampling location (Figure 7). Samples will not be collected from the bottom of the pipeline if it is not accessible due to safety hazards or because the bottom is in contact with the lake bed. Half of the samples (one from each pipeline position) will be used to obtain biota community data (e.g., mussel count, etc.) described in Section 4.1 Biota Counts/Densities/Weight and the other half will be used for

testing for the presence or absence of SRB or acid producing bacteria ("APB") as described in Section 4.2 Presence/Absence Bacteria Testing.

As discussed above, a stratified sampling design has been selected based on the visual observations of biota on the Dual Pipelines and the establishment of four zones. The zones represent varying degrees of biomass accumulation that correlate to water depth, depending on the development of the periphyton/macrophyte and mussel assemblage, including microbial biofilm development. The zones also represent potential differences in biomass accumulation depending on whether the zone is on the north or south side of the Straits.

One sample site has been established in each zone. One in each of the north and south zones of Zones A, B and C, and one in Zone D. This provides for 7 sample sites for the east and west pipelines for a total of 14 sample sites across the Dual Pipelines (Figures 3-5). Biotic samples will be collected from the coated pipeline to examine the extent to which the biomass of the plant-microbial biofilm layer or mussel layer vary with respect to location around the pipe. The data will be graphically displayed to identify potential patterns in biomass accumulation by different zones and by different positions around each pipeline. The total biomass and individual biomass components (e.g., plant-biofilm biomass or quagga biomass) for each stratum will be analyzed using a mixed model analysis of variance (ANOVA) to examine whether there are differences in the biomass with respect to zones or position on the pipeline. Further comparisons may prove to be meaningful if statistical differences are noted at the 95% confidence level.

3.3.3.2 Holidays

While there are only a few discrete locations with potential delaminated coatings, these areas will be targeted for the investigation. At all sampling locations where there is a potential holiday, biotic samples will be collected following the protocols described above in Section 3.3.3 Biota Sampling. Collection of samples will commence at the down-current location first (i.e., diver facing into the current) to minimize disturbances, turbidity, and any possible sample impacts. A set of two samples will be taken from the holiday area and another set of two samples will be taken outside of the holiday area (at the same position on the pipe as the holiday area samples [Figure 8]). That will yield a total of four samples per sampling location. One of the two holiday area samples will be used to obtain biota community data as described

in Section 4.1 Biota Counts/Densities/Weight and the other for testing for SRB and APB as described in Section 4.2 Presence/Absence Bacteria Testing.

The sampling design of the holiday areas has been structured to provide paired biomass data to evaluate whether the holiday area provides a more desirable/suitable area for periphyton-microbial biofilm development or quagga mussel attachment when compared to immediately adjacent coated area (see Figure 8). Results of holiday area sampling will provide insight as to whether the accumulation of mussels or other biota have impacted the integrity of the pipeline. The biomass data will be graphically displayed to identify potential patterns in biomass accumulation at holidays, and paired t-tests will be used to determine whether differences in biomass accumulation exist in those areas where the coating has been disturbed.

3.3.3.3 Additional Sampling

If delaminated pipe coatings are found lying along the lake floor, their location shall be first surveyed, inclusive of its surroundings, using a slow video photography pan of the site. The sample and any attached biota shall be carefully bagged and sealed in a pre-labeled numbered bag. The location and sample depth of where the sample was collected will be recorded by the field sampling team. Upon collection of the delaminated coating a survey of the pipeline shall be conducted to identify the source of the delaminated coating (i.e., where possible, the holiday area from which the sample came from). If delaminated pipe coating samples are found, they will be evaluated for biologically-induced impacts to the coating as indicated in Section 4.3 Coating Integrity Testing.

3.3.3.4 Sample Handling and Preparation

Sampling containers will be returned to the surface upon completion of the dive and grouped according to laboratory. All biological material will then be transferred from each sampling container into individual plastic storage bags (Ziploc® or Whirl-Pak®, one bag per sampling container). Transferring of the samples from the containers to the storage bags will be conducted by experienced staff using clean stainless steel instruments (e.g., long-handled spatula). Remaining material will be washed from the container into the storage bags using wash bottles filled with distilled water. Bags will be labeled with information such as the pipe, zone, sampling, and pipe position site numbers clearly visible. Representative photographs will be taken of this process.

3.3.4 Pipe Integrity Readings

At each of the holiday areas where metal is exposed, instantaneous readings of the level of cathodic protection that is being provided to the metal pipe sections of the pipeline will be recorded. Those readings will be obtained using specialized equipment that is explained in further detail below.

3.3.4.1 Cathodic Protection Evaluation

Cathodic protection readings will be taken at each holiday area where bare metal is exposed. The diver will utilize a hand-held bathycorrommeter dual element probe, specifically a Polatrak Cathodic Protection ("CP") Gun that is a product of Deepwater Corrosion Services, Inc., Houston, Texas, for those measurements.

Three millivolt ("mV") readings shall be taken of the exposed metal pipe at the four sites. The video camera attached to the diver shall assist in recording the measurements obtained from the CP Gun and in providing visual observations of the holiday area. Readings will not be taken of any coated portions of the pipe since the CP Gun requires a metal contact to obtain a reading.

Data collected during this evaluation will be correlated to the most recent cathodic protection in-line tool run.

3.4 Engineering Stress Analysis

A structural engineering firm will be engaged to conduct an engineering stress analysis considering the impact of biota on the integrity of the pipelines suspended above the floor at the Straits. The analysis will include the following:

- An allowable suspended span length of the pipeline will be calculated to include the biomass along with operating loads, drag forces, buoyant weight, etc. A sensitivity analysis will be also completed on the impact of the biota mass to allowable span length.
- Vortex induced vibration ("VIV") assessment will be also performed to determine the mode shape and associated vibration periods of pipe free spans with various lengths and the assessed biomass. A sensitivity analysis will also be completed on the impact of the biota mass to allowable span length as part of the VIV assessment.

The stress analysis will require at least 12 weeks to complete and will be dependent on the timing of the biota laboratory work following the collection of field samples.

4.0 Sample and Lab Analysis

Experienced aquatic biologists will review all of the underwater video photography taken of the Dual Pipelines, with respect to sampling sites and their surrounding habitats to assist in the identification of larger macrophytes and fish species that may be attached to or utilizing the Dual Pipelines (and which would unlikely be captured within the biota sampling containers). Review of the video photography can assist in identifying apparent visual differences in colonization rates or densities of mussels or other biota on the Dual Pipelines at various depths and locations around the pipe. Qualitative characterization of the relative level of mussel colonization on the pipe (i.e., heavy, moderate, sparse, or none) will be made using the video photography, recorded, and potentially used in conjunction with the lab analyses.

Those observations may be beneficial and substantiated by the lab analyses of the biota samples sent to an ecological laboratory. Comparison of video photography of specific areas from previous and subsequent years, where locations can be confirmed, will be evaluated for differences in colonization and recolonization rates or densities, especially in areas where maintenance and inspection activities removed mussels from the upper surface of the pipe. Lastly, any apparent or overt impacts to the Dual Pipelines will also be viewed more carefully in a lab or office setting (as compared to viewed while on the dive boat) and documented.

Two laboratories will be used to analyze and obtain data from the biota samples collected from the Dual Pipelines. As noted in Section 3.0 Methods, biota samples will be collected in pairs to enable two labs to analyze samples for various parameters from relatively the same location without having to collect and subdivide larger samples, which can increase the risk of contamination and loss of sample integrity.

The ecological laboratory will assess one set of the samples for biotic composition and physical metrics of the biota present within the samples sent to their lab. One sample for each of the four locations around the pipe will be sent to that lab for every sampling location. Where a holiday is present, one sample from the holiday area and one sample from the adjacent non-holiday area will be sent to the lab.

Experienced staff will conduct tests for the presence or absence of SRB and APB in the field on the other set of biotic samples.

4.1 Biota Counts/Densities/Weight

The ecological laboratory will qualitatively evaluate and separate out the larger biota (i.e., mussels) from the smaller biota. At the present time, biota is expected to be divided into four (4) general categories: plant matter (macrophytes and algae), mussels, benthic macroinvertebrates, and biofilm (microscopic organisms and undiscernible gelatinous material). All biota will be identified or keyed out to its lowest practicable taxa.

The ecological laboratory will obtain dry and wet weights of mussels using standard laboratory procedures for obtaining these masses, similar to those used by United States Army Corps of Engineers (USACE) (1993). Mussels will be enumerated and their shells measured. Shell measurements will be used to assist in determining the number of generations (i.e., age structure) of mussels present at each of the sampling locations. Mussels are consumed by some fish species, particularly round gobies (*Neogobius melanostomus*) (French and Jude, 2001; Wilson et al., 2006), and overt signs of mussel predation such as active feeding and high abundance of round gobies will be documented.

The ecological laboratory will obtain collective dry and wet weights of the remaining biota using standard laboratory procedures similar to those used by USACE (1993). The total mass of all aquatic biota will be obtained by adding together the weights of the mussels and the remaining non-mussel biota.

4.2 Presence/Absence Bacteria Testing

Staff will utilize BioSan Laboratories SRB and APB test kits for evaluating biota samples taken from the one set of samples collected from the various sides of the pipe, holidays, areas adjacent to holidays, and any delaminated pipe coating for the presence or absence of SRB and APB. Approximately 5 grams or less of biofilm/periphyton will be removed from the appropriate sample bag(s) and placed it into a test kit.

The SRB test kits contain tubes of culture media specifically formulated to promote the growth of anaerobic SRB. SRBs are organisms which reduce sulfate to sulfide in the absence of oxygen. The most common organisms of that type associated with contamination of the industrial environment are found in the genera *Desulfovibrio* and *Desulfotomaculum*. When sulfide is liberated, it reacts with iron in the tubed culture medium to form iron sulfide, a black

precipitate. The degree to which the test kit medium blackens, along with the length of time it takes to change color, allows for an estimated count of sulfate reducers to be made. Test kits include sample applicators that allows for the evaluation of both liquids and surfaces.

The APB test kit is a simple and rapid test for the detection and enumeration of APB with results in 24 hours when strong acid producers are present. That semi-quantitative system contains tubes of culture media specifically formulated to promote the growth of APB. One culture tube equals one test and no syringes are needed. Similar to the SRB test kits, applicators are included to allow for the evaluation of both liquids and surfaces. When acid is liberated, it reacts with the tubed culture medium and changes the color from red to yellow. The length of time it takes to change color (1-5 days) allows for an estimated count of acid producing bacteria to be made.

4.3 Coating Integrity Testing

Enbridge will retrieve representative samples of delaminated coating from the bottom of the Straits. If available, representative samples with and without biota will be collected and evaluated using microscopic examination. The intent of this work is to confirm the overall thickness of the coating and determine the penetration depth of various types of biota into the coating. Sections of delaminated coating will also be tested for SRB and APB by Enbridge Integrity.

5.0 Quality Assurance/Quality Control

Robust quality assurance/quality control measures will be instituted to ensure the integrity of samples and measurements generated during the biota investigation. Those measures will include, but not be limited to:

- Project organization: the Project Manager, subcontractors, and all parties taking part in this effort will be identified and their roles articulated prior to commencing efforts. Planning and coordination calls and/or meetings will take place with divers, members of the integrity team, biologists, etc., to ensure the proper execution of sampling and data collection protocol.
- Proper training: only trained individuals will operate sampling equipment and/or handle samples. All instruments will be calibrated prior to and throughout use according to manufacturer's guidelines.
- Field sampling review: the location of zones, sampling sites, and pipe positions where samples are to be collected will be reviewed prior to undertaking any field sampling efforts.
- Video photography and audio communication (between divers and personnel on boats) will be utilized to ensure proper documentation of conditions and sampling requirements.
- Sample handling: biological samples (e.g., biofilm, periphyton, mussels, etc.) collected during the course of the investigation will be handled and preserved using proper techniques to ensure sample integrity.
    - Methods currently include the removal and washing of all biota from the sampling containers into plastic storage bags using a flexible blade and wash bottles.
- Documentation and records: field notes, chain-of-custody documents, laboratory reports, etc., will be compiled and saved at secure locations in hard copy and/or electronic form.
    - Chain-of-custody files will be utilized to track the custody of samples throughout collection, transfer/shipment of samples to analytical labs, etc. Pertinent information such as the dates, times, and persons handling samples will be recorded to ensure that chain-of-custody is properly documented.

- Data validation: Data generated through the course of these efforts will be routinely evaluated for accuracy, precision, representativeness, and completeness.
- Reporting: Reports and project deliverables will be edited, reviewed, and finalized prior to submittal.

6.0 Schedule and Deliverables

Enbridge shall implement the Plan in accordance with the schedule described below, predicated upon EPA's approval of the Plan by March 15, 2017. If EPA approval is not granted by this date, logistical requirements, seasonal limitations, and biological growing season considerations will necessitate moving field sampling efforts to 2018.

- September 2016 → June 2017: Refinement and opportunistic testing of sampling methodologies, lab analyses, and statistical tests of any preliminary data
- July 2017 → September 2017: Visual and biotic surveys and sampling of biota on Dual Pipelines
    - Representative samples of the aquatic biota attaching to and/or surrounding the Dual Pipelines are best obtained later in the growing season since macrophytes, algae, and periphyton will not fully establish until later in the growing season when water temperatures are highest (July-September, [NOAA, 2016]).
    - Representative samples of mussels can be obtained at any time of the year but late summer is recommended given mussels would be at their greatest size (Schneider, 1992), which would enable more accurate maximum mass estimations.
- August 2017 → December 2017: Lab and engineering stress analysis
    - Discussions with the ecological laboratory and Enbridge integrity indicate that 12 weeks are needed to process the large volume of biotic samples for analysis.
    - A pipeline structural engineering firm will also require 12 weeks to complete an engineering stress analysis of the biota with respect to the integrity of the pipelines suspended above the floor at the Straits.
- December 2017 → February 2018: Data analysis
- March 2018: Submittal of Final Report
    - Submitted within 60 days of completion of field and lab analyses.

Implementation of this Plan, inclusive of its literature reviews, visual surveys, biotic measurements, biotic sampling and lab analyses, chemical and biological activities, and levels of cathodic protection will aide in answering the assessments presented in Section 2.0 Consent Decree Requirements. To achieve compliance with the consent decree, Enbridge

will implement this Plan in accordance with the schedules presented below. As part of the Plan the following deliverables will be provided to EPA, within the specified timeframes, as follows:

- No later than 60 days after the completion of field and lab analyses associated with implementing this Plan, Enbridge shall submit a final report to EPA for review and approval, describing the findings and results of the investigation.
    - In the event that the investigation finds that mussels and other biota have impaired, or threaten to impair, the Dual Pipelines, Enbridge shall supplement its final report with a proposed work plan to address such impairments, together with a proposed schedule for completing such work.
        - The supplement shall be submitted within 60 days of submittal of the final report to EPA.

7.0 Workforce

Key personnel currently proposed for implementation of this Plan include the following:

[redacted]

Key personnel, Contractors and Consultants maybe changed as needed to facilitate completion of this investigation plan as outlined in Section 6.0 Schedules and Deliverables.

8.0 Literature Cited

Castaneda, H. and Benetton, X. 2008. SRB-biofilm influence in active corrosion sites formed at the steel-electrolyte interface when exposed to artificial seawater conditions. *Corrosion Science,* Volume 50, Issue 4, April 2008, Pages 1189-1183.

Duperron, Sébastien. 2010. The Diversity of Deep-Sea Mussels and Their Bacterial Symbioses. Chapter 6: The Vent and Seep Biota, *Topics in Geobiology* 33, S. Kiel (ed.).

Enbridge. 2016. *Enbridge Line 5 Visual Biota Survey of Straits of Mackinac Crossing.* Technical Memorandum, GEI Consultants of Michigan, P.C., July 29, 2016.

EPA. 2002. *Guidance on Choosing a Sampling Design for Environmental Data Collection for Use in Developing a Quality Assurance Project Plan* EPA QA/G-5S, EPA/240/R-02/005

Epping, E., V. Schoemann and H. de Heij, 1998. Manganese and iron oxidation during benthic oxygenic photosynthesis. Estuarine Coastal and Shelf Science 47: 753–767.

French, J.R.P. and Jude, D.J. 2001. Diets and Diet Overlap of Nonindigenous Gobies and Small Benthic Native Fishes Co-inhabiting the St. Clair River, Michigan. *J. Great Lakes Res.* 27(3):300–311.

Gale, W.F and D. Thompson. 1975. A Suction Sampler for Quantitatively Sampling Benthos on Rocky Substrates in Rivers. Trans. Am. Fish. Soc., Volume 104, pages 398-405.

Hicks, R.E. and Oster, R.J. 2012. Developing a Risk Assessment Tool to Predict the Risk of Accelerated Corrosion to Port Infrastructure. Final report to the Great Lakes Maritime Research Institute.

Jeroschewski,P., C. Steuckart and M. Kühl. 1996. An amperometric microsensor for the determination of H_2S in aquatic environments. Analytical Chemistry 68(24): 4351 – 4357.

Kikuchi, R.M., A.A. Fonesca-Gessner, G.Y. Shimizu. 2006. Suction sampler for collection of benthic macroinvertebrates in several continental aquatic environments: a comparative study with the Hess and Surber samplers. Acta Limnol. Bras., 18(1):29-37.

Koschorreck, M., A. Kleeberg, R. Herszprung and K. Wendt-Potthoff. 2007. Effects of benthic filamentous algae on the sediment-water interface in an acidic mining lake. Hydrobiologia 592:387-397.

Krause-Jensen, D., P.Christensen and S. Rysgaard, 1999. Oxygen and nutrient dynamics within mats of the filamentous macroalga *Chaetomorpha linum*. Estuaries 22: 31–38.

Moura, M.C., Pontual, E.V., Paiva, P.M.G., and Coelho, L.C.B.B. 2013. An Outline to Corrosive Bacteria. Chapter in: Microbial pathogens and strategies for combating them: science, technology and education. Formatex Research Center. (A. Méndez-Vilas, Ed.)

National Oceanic and Atmospheric Administration (NOAA) - Great Lakes Average GLSEA Surface Water. Accessed 9/15/16 -- https://coastwatch.glerl.noaa.gov/statistic/avg-sst.php

Purcell, S. 1996. A direct method for assessing sediment load in epilithic algal communities. *Coral Reefs*, November 1996, Volume 15, Issue 4, pp 211–213.

Purcell, S. and Bellwood, D. *2001. Spatial patterns of epilithic algal and detrital resources on a coral reef. Coral Reefs,* September 2001, Volume 20, Issue 2, pp 117–125.

Revsbech, N. 1989. An oxygen microsensor with a guard cathode. Limnology and Oceanography 34:474–478.

Schneider, D. W. 1992. A bioenergetics model of zebra mussel, *Dreissena polymorpha*, growth in the Great Lakes. *Can. J. Fish. Aquat. Sci.* 49: 1406-1416.

Stachowitsch, M., B. Riedel, M. Zuschin and R. Machan. 2007. Oxygen depletion and benthic mortalities: the first *in situ* experimental approach to documenting an elusive phenomenon. Limnology and Oceanography: Methods 5:344-352.

Thongnueakhaeng, W. and P. Chaiprasert. 2015. Effect of dissolved oxygen concentrations on specific microbial activities and their metabolic products in simultaneous sulfur and nitrogen removal. International Journal of Environmental Science and Development 6(4): 235-240.

Trampe, E., J. Larsen, M. Glaring, P. Stougaard and M. Kühl. 2016. *In situ* dynamics of O2, pH, light, and photosynthesis in ikaite tufa columns, (Ikka Fjord, Greenland) – A unique microbial habitat. Frontiers in Microbiology 7(722): 1-13.

USACE, 1993. A Method for Calculating the Total Mass of Zebra Mussels. Zebra Mussel Research Technical Notes.

Van der Meer, J. 1997. *Sampling design of monitoring programmes for marine benthos: a comparison between the use of fixed versus randomly selected stations*. Journal of Sea Research 37:167-175

Vopel, K., D. Thistle, J. Ott, M. Bright and H. Roy. 2005. Wave-induced H_2S flux sustains chemoautotrophic symbiosis. Limnology and Oceanography 50(1):128-133.

Vopel, K. and I. Hawes. 2006. Photosynthetic performance of benthic microbial mats in Lake Hoare, Antarctica. Limnology and Oceanography 51(4):1801-1812.

Water Research Foundation. 2015. Assessing Performance of Biofilm Sampling Approaches. Report to USEPA.

Wilson, K.A., Howell, T.E., and Jackson, D.A. 2006. Replacement of Zebra Mussels by Quagga Mussels in the Canadian Nearshore of Lake Ontario: the Importance of Substrate, Round Goby Abundance, and Upwelling Frequency. *J. Great Lakes Res.* 32:11–28.

FIGURES

Figure 1 – Qualitative assessment of the biota across the east pipeline
Figure 2 – Qualitative assessment of the biota across the west pipeline
Figure 3 – General profile view of east and west pipelines and associated zones
Figure 4 – Profile view of sampling zones and sites for the east pipeline
Figure 5 – Profile view of sampling zones and sites for the west pipeline
Figure 6 – Biotic sampler
Figure 7 – Coated pipe area sampling layout
Figure 8 – Holiday area sampling layout

FIGURE 1
QUALITATIVE ASSESSMENT OF THE BIOTA ACROSS THE EAST PIPELINE
ESKAPITE PROJECT AREA
EAST PIPELINE OVERVIEW
2016 BIOTA INVESTIGATION WORK PLAN

Legend

- Topographic Profile
- Bathymetric Profile
- Pipeline Profile
- Water Level Indicator
- Station ID
- Span ID

ENBRIDGE

Date: 1:20 , 8/26/2016 Depicted: LB2, 8/26/2016 Project # Name, M Theme: gdfenclosures01a

Source: Topo/Hydro data is in NAD83 UTM Zone 15 Horizontal, Topographic Data (for Station Elevations) is in CGVD28 Vertical.
Bathymetric Data (for Water Level Indicator Elevations) is in CGVD28 Vertical. Pipeline Profile Data (for Pipeline Elevations) is in CGVD28 Vertical.

NORTH
SOUTH
Pertylynx Lake Mesohydrite Mussels
Abundance of Mussels Indeterminate (Species on Archive)
Pertylynx Lake Mesohydrite Mussels
Mussels Abundant
Pertylynx Moderate Mussels Moderate
Pertylynx Lake Mesohydrite Mussels
Abundance of Mussels Indeterminate (Species on Archive)
Mussels Abundant
Mussels Abundant
Mussels Abundant

FIGURE 2
QUALITATIVE ASSESSMENT OF THE BIOTA ACROSS THE WEST PIPELINE
TEMAITE CREEK TO ENBRIDGE WABASH RIVER OVERVIEW
2016 BIOTA INVESTIGATION WORKPLAN

Legend

- Topographic Profile
- Bathymetric Profile
- Pipeline Profile
- Water Level Indicator
- 1+ 000 Station ID
- 0.0+ Span ID

ENBRIDGE

Date: 1/20/2016 Reviewed: 1/21/2016 Project Name: SF_Temaite_GIFloodmap2014_v2

Source: Topographic Mapping is based on Esri World Topo. Hydrographic data from Esri Water Features and Esri Ocean Base.
Bathymetric Data is based on Lake Michigan Bathymetric Data, Great Lakes Environmental Research Laboratory, Great Lakes Bathymetry, great lake

NORTH

SOUTH

Increase in Current

Periphyton and Macrophytes Abundant; Abundance of Mussels Undiscernible

Periphyton Moderate to Abundant; Mussels Moderate to Abundant

Periphyton Sparse to Moderate; Mussels Abundant

Periphyton Moderate; Mussels Moderate to Abundant

Periphyton Moderate to Abundant; Mussels Moderate to Abundant

Periphyton and Macrophytes Abundant; Abundance Mussels Undiscernible

Bottom substrate appears to be clay at 1155 feet

Bottom substrate appears to be silt at 1177 feet

Fish Species in Abundance

Fish Species in Moderate

Fish Species Abundance Moderate; Abundance Fish Species Moderate

Fish Species Abundance Moderate; Abundance Fish Species Moderate

Fish Species Abundance Moderate; Abundance Fish Species

WEST PROFILE ZONES

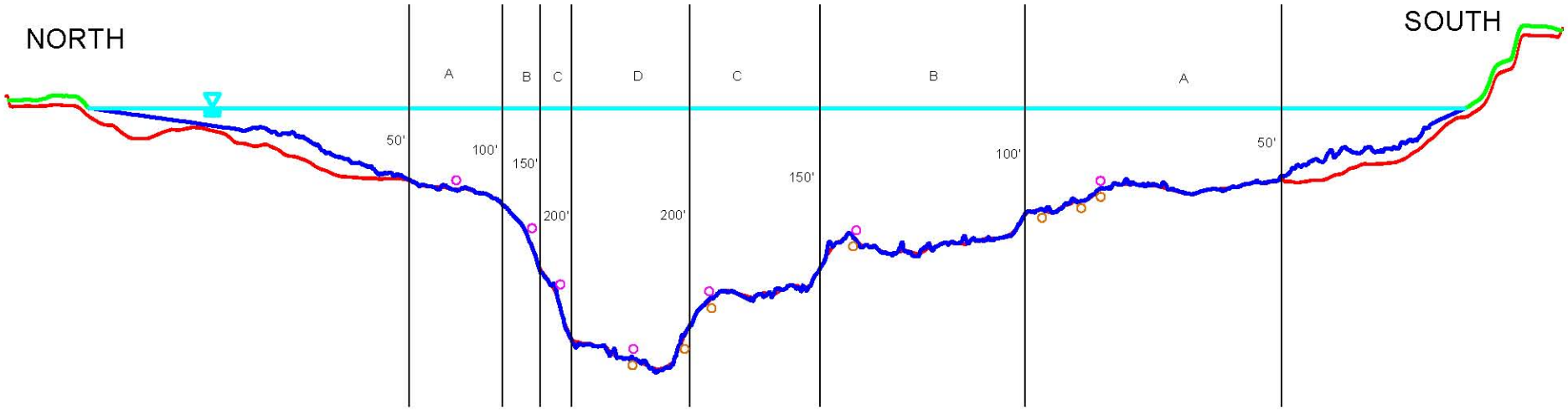

EAST PROFILE ZONES

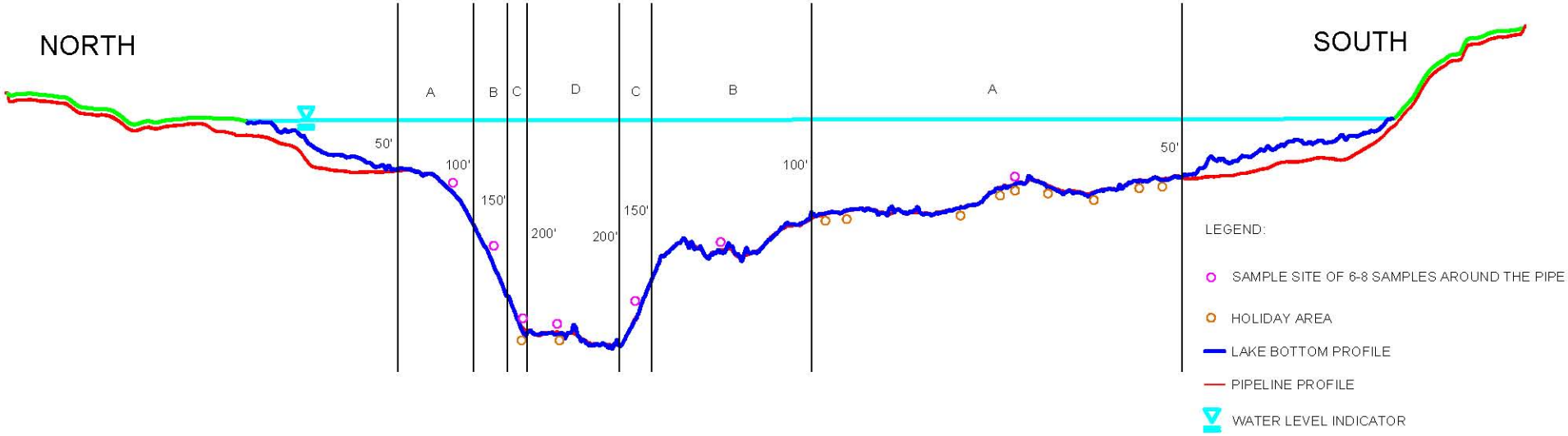

NOTE: DATA DISPLAYED IS NOT SURVEY GRADE AND IS FOR INFORMATIONAL PURPOSES ONLY

DATE: 9/20/2016	FIGURE 3: GENERAL PROFILE VIEW OF EAST AND WEST PIPELINE AND ASSOCIATED ZONES Sources: Topographic imagery from ArcGIS Online. Topographic Data from Ballard Marine Construction.	ENBRIDGE

FIGURE 4
PROFILE VIEW OF SAMPLING ZONES AND SITES FOR THE EAST PIPELINE
ESKAPIT TO ROCKY RIVER
EAST PIPELINE OVERVIEW
2016 BIOTA INVESTIGATION WORKPLAN

Legend

- Topographic Profile
- Water Surface Profile
- Pipeline Profile
- Water Level Indicator
- Station ID
- Span ID
- Natural Touch Down
- Bore Pit
- Existing Anchor Location
- Proposed Anchor Location
- Holiday Location
- Sample Location

ENBRIDGE

Created: LJEC, 8/26/2016 | Reviewed: LJEC, 8/26/2016 | Project #: Biota_08 | Theme: gLRevisionsV2.1a

Source: Topo Data provided by Enbridge Inc. Photographs taken from Enbridge Inc. Aerial Survey, 2014.
Notes: Profile is based on Enbridge Inc. Pipeline Profile Drawings. Profile is not to scale. Profile is for illustrative purposes only, please refer to Enbridge Inc. Pipeline Profile Drawings for more information.

NORTH
SOUTH
ZONE A
ZONE B
ZONE C
ZONE D
ZONE E
ZONE F
ZONE G
ZONE H
Holiday
Holiday
Holiday

FIGURE 5
PROFILE VIEW OF SAMPLING ZONES AND SITES FOR THE WEST PIPELINE STRAITS OF BELLE ISLE WESTERN REGIONAL OVERVIEW 2016 BIOTA INVESTIGATION WORK PLAN

Legend

- Topographic Profile
- Water Profile
- Pipeline Profile
- Water Level Indicator
- Station ID
- Span ID
- Natural Touch Down
- Anchor Leg
- Existing Anchor Location
- Proposed Anchor Location
- Holiday Location
- Sample Location

ENBRIDGE

Date: _ LEG: 8/26/2016 _Exported: LEG: 8/26/2016 | Project:# _Strata_18 _Theme: gdRenderer017

Source: Topo Basemap Layers by ArcGIS Online - Topographic Map (Esri, DeLorme, NAVTEQ, TomTom, Intermap, increment P Corp., GEBCO, USGS, FAO, NPS, NRCAN, GeoBase, IGN, Kadaster NL, Ordnance Survey, Esri Japan, METI, Esri China (Hong Kong), swisstopo, MapmyIndia, © OpenStreetMap contributors, and the GIS User Community)

Notes: Topo Basemap Layers by ArcGIS Online - Topographic Map (Esri, DeLorme, NAVTEQ, TomTom, Intermap, increment P Corp., GEBCO, USGS, FAO, NPS, NRCAN, GeoBase, IGN, Kadaster NL, Ordnance Survey, Esri Japan, METI, Esri China (Hong Kong), swisstopo, MapmyIndia, © OpenStreetMap contributors, and the GIS User Community, pipeline data

NORTH
SOUTH
ZONE A
ZONE B
ZONE C
ZONE D
ZONE E
ZONE F
Holiday Location
Holiday Location
Holiday Location

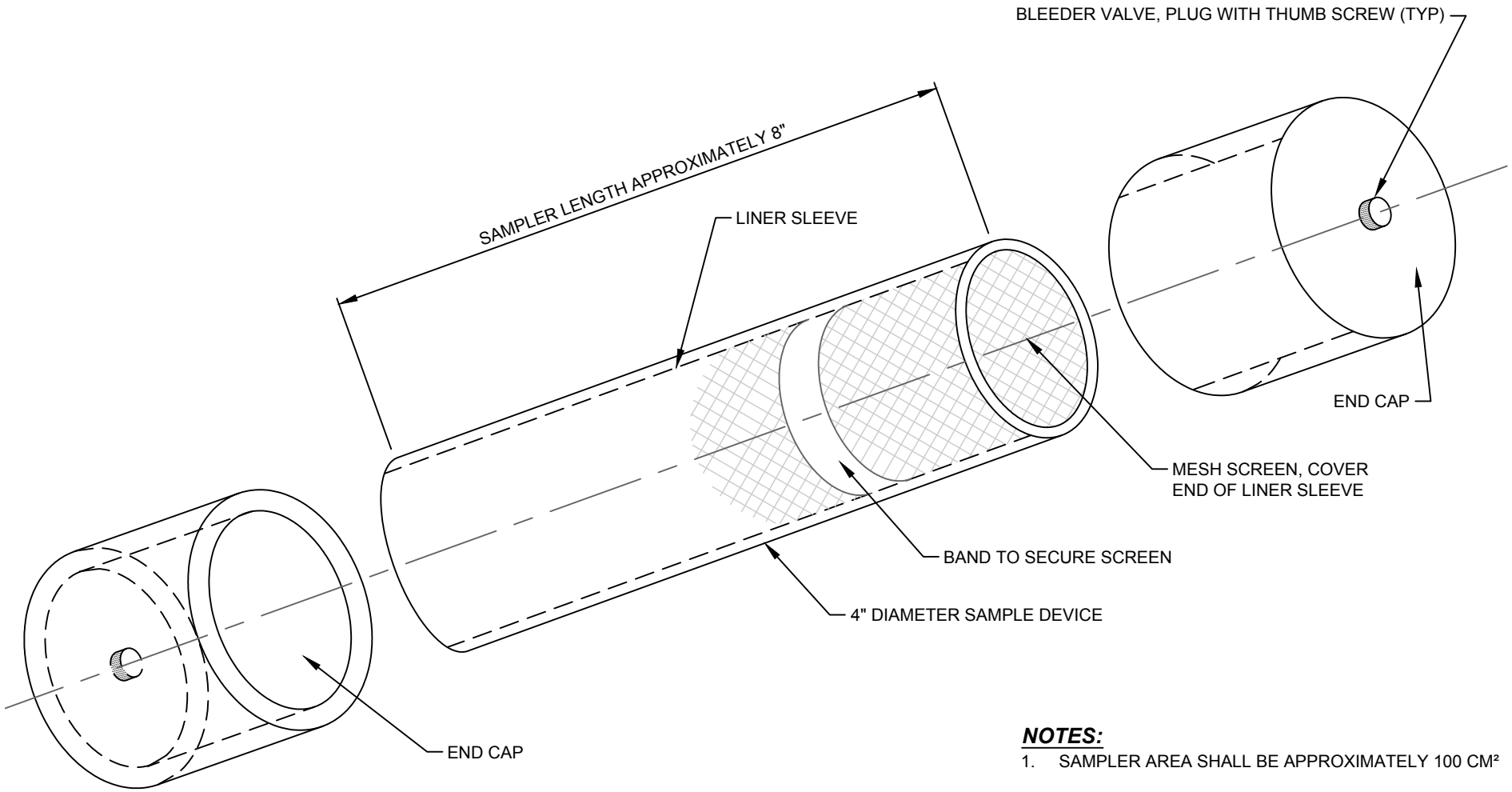

NOTES:

1. SAMPLER AREA SHALL BE APPROXIMATELY 100 CM²

BIOTIC SAMPLER ISOMETRIC VIEW

SCALE: N.T.S.

DATE: 8/18/2016	FIGURE 6: BIOTIC SAMPLER (Design may change pending testing)	ENBRIDGE

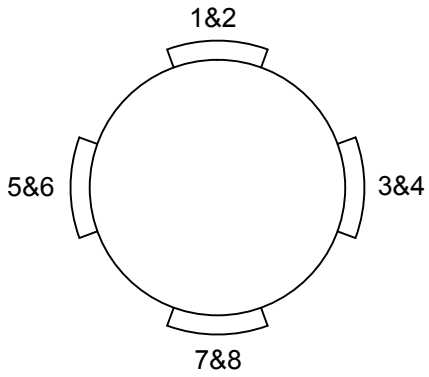

BIOTIC SAMPLING SECTION LAYOUT

SCALE: N.T.S.

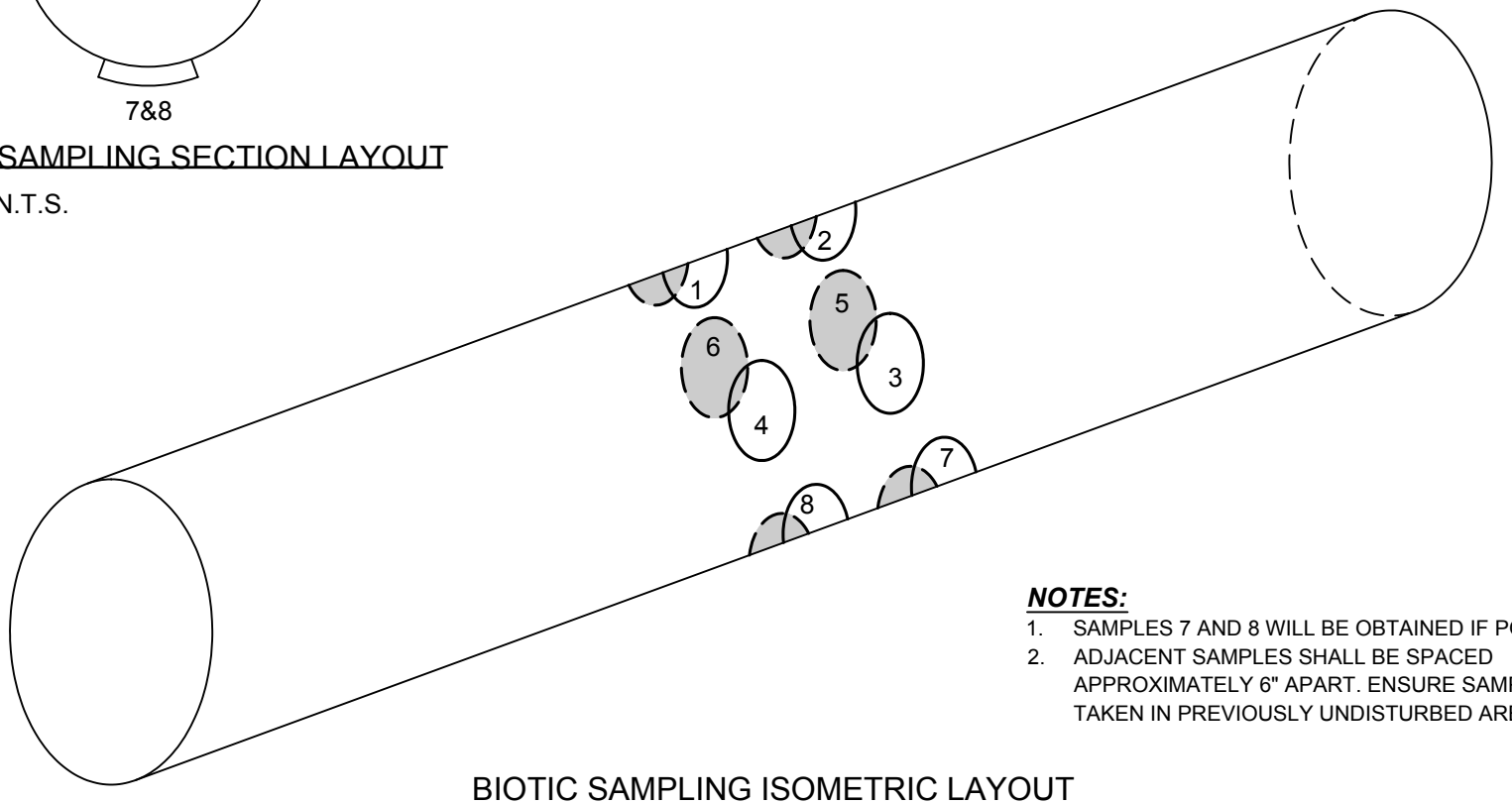

NOTES:

1. SAMPLES 7 AND 8 WILL BE OBTAINED IF POSSIBLE.
2. ADJACENT SAMPLES SHALL BE SPACED APPROXIMATELY 6" APART. ENSURE SAMPLES ARE TAKEN IN PREVIOUSLY UNDISTURBED AREAS.

BIOTIC SAMPLING ISOMETRIC LAYOUT

SCALE: N.T.S.

DATE: 8/18/2016	FIGURE 7: COATED PIPE AREA SAMPLING LAYOUT (Design may change pending testing)	ENBRIDGE

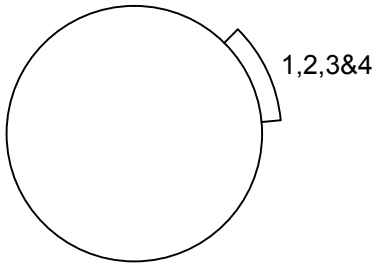

BIOTIC SAMPLING SECTION LAYOUT

SCALE: N.T.S.

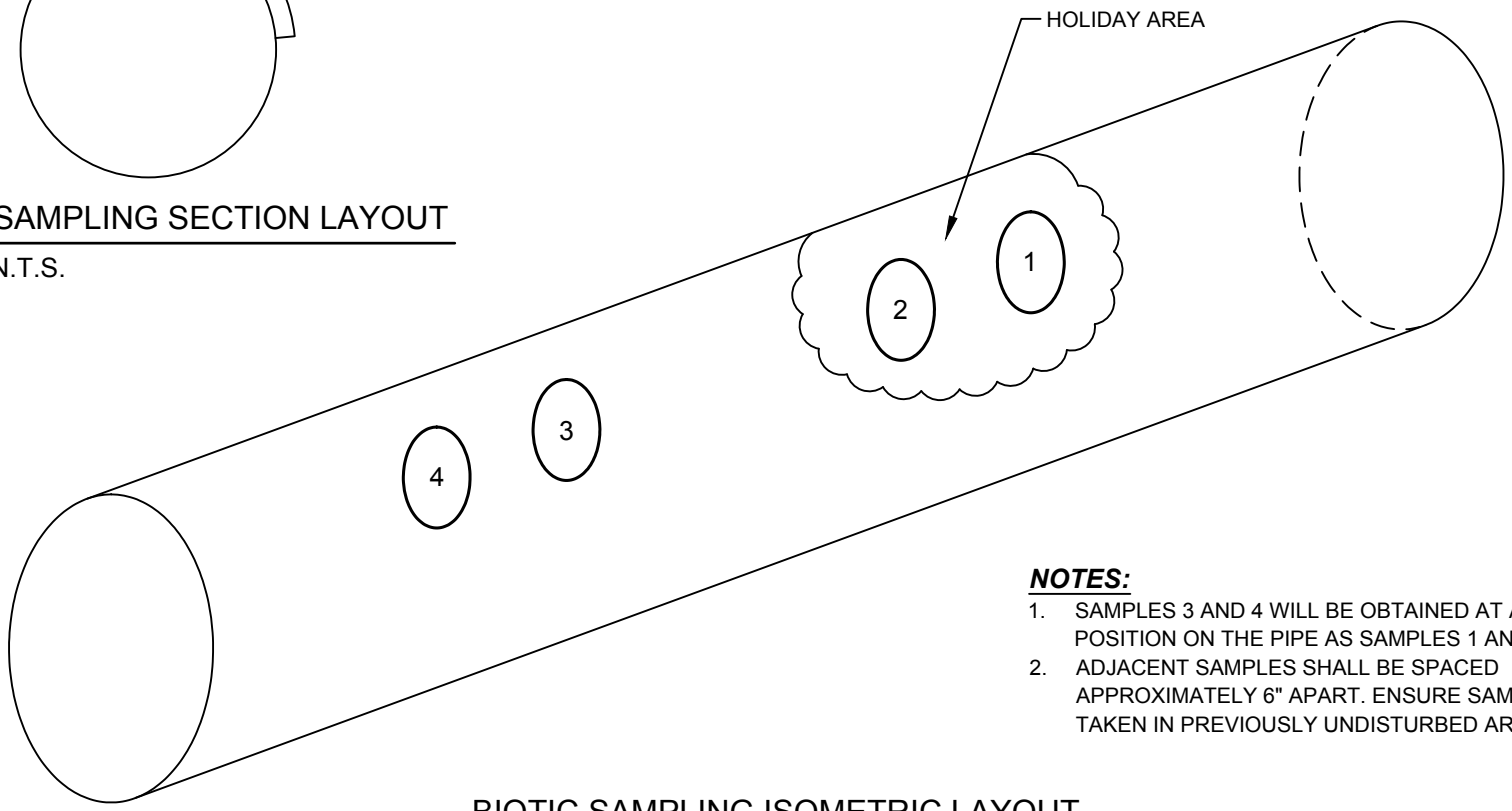

NOTES:

1. SAMPLES 3 AND 4 WILL BE OBTAINED AT A SIMILAR POSITION ON THE PIPE AS SAMPLES 1 AND 2.
2. ADJACENT SAMPLES SHALL BE SPACED APPROXIMATELY 6" APART. ENSURE SAMPLES ARE TAKEN IN PREVIOUSLY UNDISTURBED AREAS.

BIOTIC SAMPLING ISOMETRIC LAYOUT

SCALE: N.T.S.

DATE: 8/18/2016	FIGURE 8: HOLIDAY AREA SAMPLING LAYOUT (Design may change pending testing)	ENBRIDGE

TABLES

Table 1: Biota sample sites: East and West pipelines
Table 2: Holiday area sample sites: East and West pipelines

Table 1. Biota sample sites: East and West pipelines

East Pipeline - biota sample sites

Zone	Water depth (ft)[1]	Proposed biota sampling sites[2]	Description of biota sampling sites	Total number of biota samples[3]
A (north)	50-100	1	Equidistant between E07 and E65B	6-8
B (north)	100-150	1	North of E-05B	6-8
C (north)	150-200	1	Holiday south of E01B-B	6-8
D	>200	1	Holiday north of E76A	6-8
C (south)	150-200	1	E16	6-8
B (south)	100-150	1	South of E-61A	6-8
A (south)	50-100	1	Holiday south of 34A	6-8

West Pipeline - biota sample sites

Zone	Water depth (ft)[1]	Proposed biota sampling sites[2]	Description of biota sampling sites	Total number of biota samples[3]
A (north)	50-100	1	W65B	6-8
B (north)	100-150	1	W61A	6-8
C (north)	150-200	1	W58B	6-8
D	>200	1	Holiday near W54A	6-8
C (south)	150-200	1	Holiday north of W-70B	6-8
B (south)	100-150	1	Holiday south of W35B North	6-8
A (south)	50-100	1	Holiday south of W10	6-8

[1] Pipelines buried to water depth of approximately 65 feet

[2] One site per zone, sampling immediately adjacent to holiday areas when possible

[3] Six samples/site if pipeline bottom not accessible; eight samples/site otherwise

Table 2. Holiday area sample sites: East and West pipelines

East Pipeline - holiday area sample sites

Zone	Water depth (ft)[1]	Proposed holiday sampling sites[2]	Description of holiday sampling sites	Total number of holiday samples[3]
A (north)	50-100	0	NA	-
B (north)	100-150	0	NA	-
C (north)	150-200	1	Holiday south of E01B-B	4
D	>200	1	Holiday north of E76A	4
C (south)	150-200	0	NA	-
B (south)	100-150	0	NA	-
A (south)	50-100	1	Holiday south of 34A	4

West Pipeline - holiday area sample sites

Zone	Water depth (ft)[1]	Proposed holiday sampling sites[2]	Description of holiday sampling sites	Total number of holiday samples[3]
A (north)	50-100	0	NA	-
B (north)	100-150	0	NA	-
C (north)	150-200	0	NA	-
D	>200	1	Holiday near W54A	4
C (south)	150-200	1	Holiday north of W-70B	4
B (south)	100-150	1	Holiday south of W35B North	4
A (south)	50-100	1	Holiday south of W10	4

[1] Pipelines buried to water depth of approximately 65 feet

[2] Biota and holiday area sampling sites are at the same location, but samples collected independently (i.e., 6-8 biota samples, 4 holiday samples)

[3] Paired sampling: two samples in holiday area, two samples immediately adjacent holiday area

APPENDICES

Appendix A – Bibliography

(Includes literature cited and other documents preliminarily reviewed)

Al Abbas, F.M., Williamson, C., Bhola, S., Spear, J.R., Olson, D.L. 2013. Influence of sulfate reducing bacterial biofilm on corrosion behavior of low-alloy, high-strength steel (API-5L X80). *International Biodeterioration and Biodegradation*, 78:34-42.

Bjerkan, G., Witso, E., and Bergh, K. 2009. Sonication is superior to scraping for retrieval of bacteria in biofilm on titanium and steel surfaces in vitro. *Acta Orthopaedica*, 80 (2): 245–250.

Brajendra Mishra c, Anthony E. Kakpovbia aBeeton, A.M. and J.H. Saylor. Limnology of Lake Huron. 1995. In The Lake Huron Ecosystem: Ecology, Fisheries, and Management pp. 1-37. Great Lakes Environmental Research Laboratory, NOAA

Castanede, H. and Benetton, X. 2008. SRB-biofilm influence in active corrosion sites formed at the steel-electrolyte interface when exposed to artificial seawater conditions. *Corrosion Science*, Volume 50, Issue 4, April 2008, Pages 1189-1183.

Duperron, Sébastien. 2010. The Diversity of Deep-Sea Mussels and Their Bacterial Symbioses. Chapter 6: The Vent and Seep Biota, *Topics in Geobiology* 33, S. Kiel (ed.).

Enning, D., and Garrelfs, J. 2014. Corrosion of Iron by Sulfate-Reducing Bacteria: New Views of an Old Problem. *Applied and Environmental Microbiology*, Volume 80 Number 4, p. 1226–1236.

Epping, E., V. Schoemann and H. de Heij, 1998. Manganese and iron oxidation during benthic oxygenic photosynthesis. *Estuarine Coastal and Shelf Science* 47: 753–767.

EPRI, 1991. Cathodic Protection Criteria for Controlling Microbially Influenced Corrosion in Power Plants. Palo Alto, CA.

EPRI, 1992. Zebra Mussel Monitoring and Control Guide. Palo Alto, CA.

EPRI, 2004. Water Treatment Strategies: Microorganism Control. Palo Alto, CA

Freeberg, M.H., W.W. Taylor, R.W. Brown. 1990. Effect of Egg and Larval Survival on Year-Class Strength of Lake Whitefish in Grand Traverse Bay, Lake Michigan. *Trans. Am. Fish. Soc.* Vol. 1, pages 92-100.

French, J.R.P. and Jude, D.J. 2001. Diets and Diet Overlap of Nonindigenous Gobies and Small Benthic Native Fishes Co-inhabiting the St. Clair River, Michigan. *J. Great Lakes Res.* 27(3):300–311.

Gale, W.F and D. Thompson. 1975. A Suction Sampler for Quantitatively Sampling Benthos on Rocky Substrates in Rivers. *Trans. Am. Fish. Soc.,* Volume 104, pages 398-405.

Hicks, Randall. 2007. Structure of Bacterial Communities Associated with Accelerated Corrosive Loss of Port Transportation Infrastructure. Report to/for Great Lakes Maritime Research Institute.

Hicks, Randall. 2008. Development and Succession of Microbial Communities Associated with Corroding Steel Pilings in the Duluth-Superior Harbor. Interim Report.

Hicks, Randall. 2012. Assessing the Role of Microorganisms in the Accelerated Corrosion of Port Transportation Infrastructure in the Duluth-Superior Harbor.

Hicks, R.E. and Oster, R.J. 2012. Developing a Risk Assessment Tool to Predict the Risk of Accelerated Corrosion to Port Infrastructure. Final report to the Great Lakes Maritime Research Institute.

Hu, A. 2004. Investigation of sulfate-reducing bacteria growth behavior for the mitigation of microbiologically-influenced corrosion (MIC). Thesis submitted to Ohio University.

Jeroschewski,P., C. Steuckart and M. Kühl. 1996. An amperometric microsensor for the determination of H2S in aquatic environments. *Analytical Chemistry* 68 (24): 4351 – 4357.

Kikuchi, R.M., A.A. Fonesca-Gessner, G.Y. Shimizu. 2006. Suction sampler for collection of benthic macroinvertebrates in several continental aquatic environments: a comparative study with the Hess and Surber samplers. *Acta Limnol. Bras.,* 18(1):29-37.

Koschorreck, M., A. Kleeberg, R. Herszprung and K. Wendt-Potthoff. 2007. Effects of benthic filamentous algae on the sediment-water interface in an acidic mining lake. *Hydrobiologia* 592:387-397.

Krause-Jensen, D., P.Christensen and S. Rysgaard, 1999. Oxygen and nutrient dynamics within mats of the filamentous macroalga Chaetomorpha linum. *Estuaries* 22: 31–38.

Li, K., Whitfield, M., and Van Vliet, K. 2013. Beating the bugs: roles of microbial biofilms in corrosion. *Corrosion Reviews*, Volume 31, Issue 3-6.

Mills, Edward (et al.). 1996. A Review of the Biology and Ecology of the Quagga Mussel (*Dreissena bugensis*), a Second Species of Freshwater Dreissenid Introduced to North America. *American Zoologist*, 36: 271-286.

Lake Champlain Maritime Museum. 1996. Zebra mussels and their impacts on historic shipwrecks. 62 pgs.

Moura, M.C., Pontual, E.V., Paiva, P.M.G., and Coelho, L.C.B.B. 2013. An Outline to Corrosive Bacteria. Chapter in: Microbial pathogens and strategies for combating them: science, technology and education. Formatex Research Center. (A. Méndez-Vilas, Ed.)

National Oceanic and Atmospheric Administration (NOAA) - Great Lakes Average GLSEA Surface Water. Accessed 9/15/16 -- https://coastwatch.glerl.noaa.gov/statistic/avg-sst.php

Oster, R.J. 2012. Modeling the Corrosive Loss of Port Infrastructure in the Duluth-Superior Harbor and the North Shore of Lake Superior. Master's Thesis submitted to The University of Minnesota.

Purcell, S. 1996. A direct method for assessing sediment load in epilithic algal communities. *Coral Reefs*, November 1996, Volume 15, Issue 4, pp 211–213.

Purcell, S. & Bellwood, D. 2001. Spatial patterns of epilithic algal and detrital resources on a coral reef. *Coral Reefs*, September 2001, Volume 20, Issue 2, pp 117–125.

Revsbech, N. 1989. An oxygen microsensor with a guard cathode. *Limnology and Oceanography* 34:474–478.

Schneider, D. W. 1992. A bioenergetics model of zebra mussel, *Dreissena polymorpha*, growth in the Great Lakes. *Can. J. Fish. Aquat. Sci.* 49: 1406-1416.

Sherar, B.W.A., Power, I.M., Keech, P.G., Mitlin, S., Southam, G., and Shoesmit, D.W. 2011. Characterizing the effect of carbon steel exposure in sulfide containing solutions to microbially induced corrosion. *Corrosion Science* 53: 955–960.

Stachowitsch, M., B. Riedel, M. Zuschin and R. Machan. 2007. Oxygen depletion and benthic mortalities: the first in situ experimental approach to documenting an elusive phenomenon. *Limnology and Oceanography*: Methods 5:344-352.

Thongnueakhaeng, W. and P. Chaiprasert. 2015. Effect of dissolved oxygen concentrations on specific microbial activities and their metabolic products in simultaneous sulfur and nitrogen removal. *International Journal of Environmental Science and Development* 6(4): 235-240.

Trampe, E., J. Larsen, M. Glaring, P. Stougaard and M. Kühl. 2016. In situ dynamics of O2, pH, light, and photosynthesis in ikaite tufa columns, (Ikka Fjord, Greenland) – A unique microbial habitat. *Frontiers in Microbiology* 7(722): 1-13.

USACE, 1993. A Method for Calculating the Total Mass of Zebra Mussels. Zebra Mussel Research Technical Notes.

USACE, 1994. Zebra Mussel Infestation at Black Rock Lock, Buffalo, New York. Zebra Mussel Research Technical Notes.

USACE, 1998. Corrosion Rates of Ferrous Metals Associated with Zebra Mussel Infestations. Zebra Mussel Research Technical Notes.

USACE, 2010. Zebra Mussel Action Plan. U.S. Army Corps of Engineers Tulsa District, Operations Division.

USEPA. 2002. Guidance on Choosing a Sampling Design for Environmental Data Collection for Use in Developing a Quality Assurance Project Plan EPA QA/G-5S, EPA/240/R-02/005

Van der Meer, J. 1997. Sampling design of monitoring programmes for marine benthos: a comparison between the use of fixed versus randomly selected stations. *Journal of Sea Research* 37:167-175

Vopel, K., D. Thistle, J. Ott, M. Bright and H. Roy. 2005. Wave-induced H2S flux sustains chemoautotrophic symbiosis. *Limnology and Oceanography* 50(1):128-133.

Videla and Herrera. 2005. Microbiologically influenced corrosion: looking to the future*. Int. Microbiol.* Vol. 8, 2005.

Vopel, K. and I. Hawes. 2006. Photosynthetic performance of benthic microbial mats in Lake Hoare, Antarctica. *Limnology and Oceanography* 51(4):1801-1812.

Water Research Foundation. 2015. Assessing Performance of Biofilm Sampling Approaches. Report to USEPA.

Wilson, K.A., Howell, T.E., and Jackson, D.A. 2006. Replacement of Zebra Mussels by Quagga Mussels in the Canadian Nearshore of Lake Ontario: the Importance of Substrate, Round Goby Abundance, and Upwelling Frequency. *J. Great Lakes Res.* 32:11–28.

Zhang, P., Xu, D., Li, Y., Yang, K., Gu, T. 2015. Electron mediators accelerate the microbiologically influenced corrosion of 304 stainless steel by the *Desulfovibrio vulgaris* biofilm*. Bioelectrochemistry* 101: 14–21.